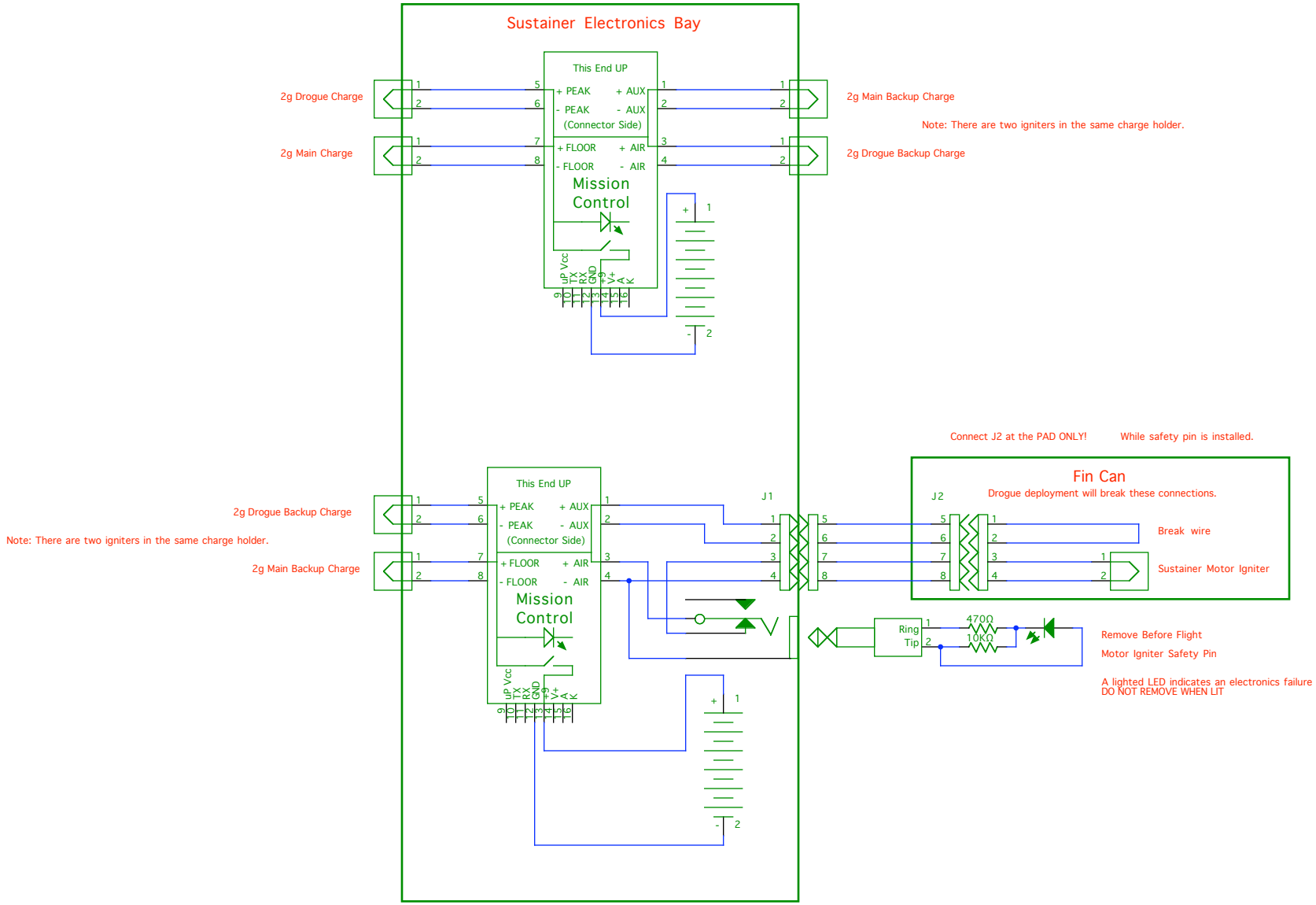

8/31/06	DMF-Rockets.com
	XRush Sustainer wiring